Machining Drawing SV32F－60WS32（φ 1.2,1.0,1.6）

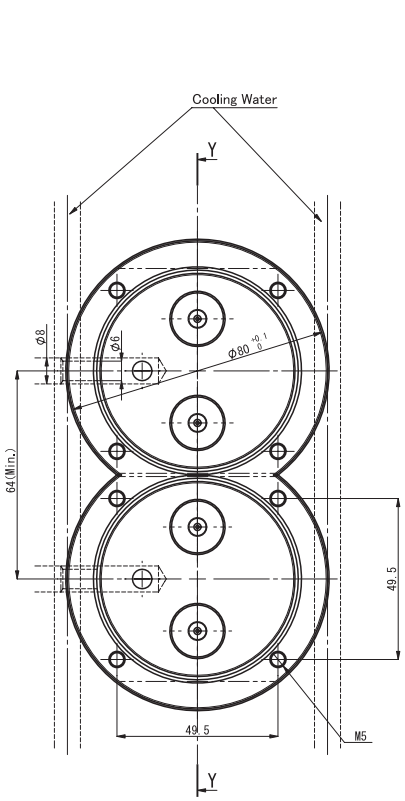

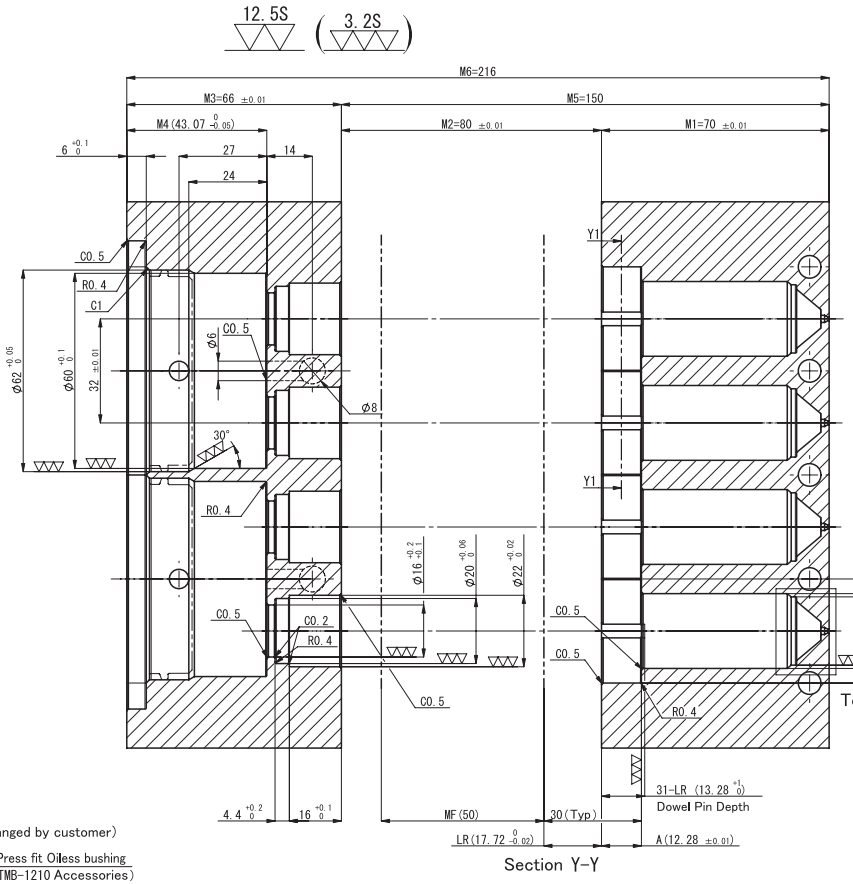

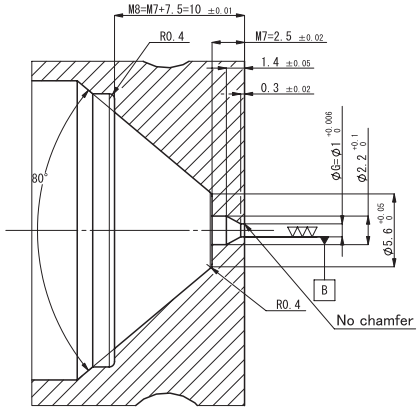

Details at the top
Scale 4 : 1

※Steel at gate portion need to be hardened.
(HRC 50 or higher)

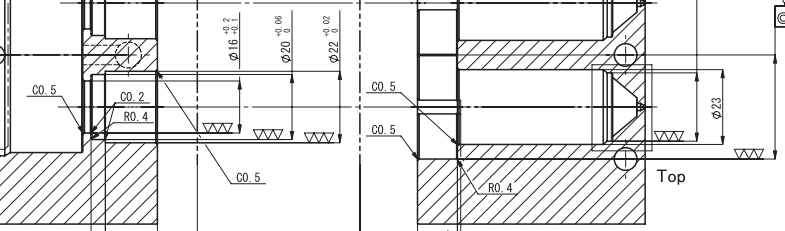

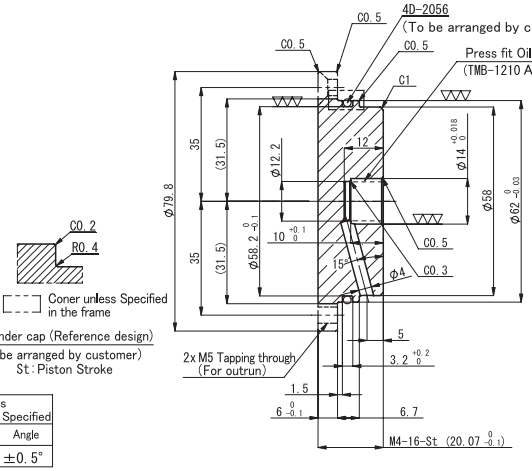

Tolerances unless Specified	
Dimension	Angle
±0.1	±0.5°

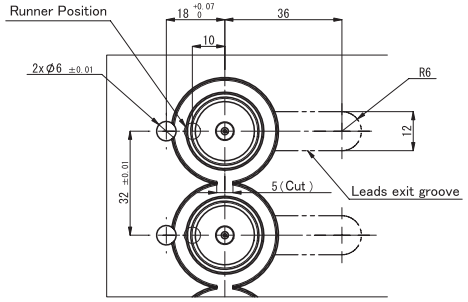

< Section Y1-Y1 >

※ If the Dimension at LR is less than 12mm, clearance groove is needed so that there is enough space to put in lead wire sleeve on the back up plate.(The groove should be 12mm−LR deep and 12mm wide.)

SV32F-60WS32 Base dimension

Standard	M1	M2	M3	M5	M6
SV32F-85	70	80	66	150	216
SV32F-105	90			170	236

φG	1.0	1.2	1.6

The drawing shows L=85、P=160(B)、φd=φ1.0

( ) Dimensions of A, LR, M4 and Cylinder cap in the drawing are referential values obtained through the formula on condition that L=85, P=160, base dimension M1, M2, M3, SP,E and melt temp. 230 °C (manifold temp. 230°C, probe temp. 250°C), mold temp. 25°C.

Obtain each dimension according to the operating condition.

CP1－A02－032E

SEIKI VALVE & SPEAR SYSTEM